EE 330 Laboratory 8

Thyristor Device Characterization and Applications

Spring 2013

Objective:

The objective of this laboratory experiment is to become familiar with the operation thyristors, to develop methods for measuring key parameters of thyristors, and to investigate some basic applications of these devices.

Components Needed:

Q4015L5 Triac, S4010LS2 SCR, 24V-0.5A incandescent lamp, and other standard electronic components.

Background:

Thyristors are devices commonly used in high power applications and are used extensively throughout the power electronics field. These devices are unique in that a small gate current or gate voltage can trigger a large current flow, regardless of whether that base current remains on or not. In their most ideal form, they are electronic switches where a logic-level signal can rapidly turn the switch ON or OFF. Thyristors are designed to operate as switches over a wide range of voltage and current levels and can be used to switch resistive loads but more commonly they are used to switch reactive loads. In this experiment emphasis will be placed only on switching resistive loads. Some additional circuit design issues become relevant when switching large reactive loads due to the extreme voltages or currents that are inherent when rapidly switching energy storage elements.

Specified voltage ratings of thyristors range from a few tens of volts up to multiple kV levels and rated current levels range from the sub 1A range up to kA level currents. In higher power applications thyristors will dissipate considerable energy when in the conducting state so heatsinks are required to keep the operating temperature low enough to avoid damaging or destroying the devices.

There are many types of thyristors available today with the major distinctions being in how the devices can be turned off. The most basic units are the SCR and the Triac and will be the focus of this experiment. The acronyms for some of the other types of thyristors, often considered more advanced devices, are BCTs, LASCR, RCT, GTO, FET-CTH, MTO, ETO, IGCT, MCT, and SITH. Regardless of whether working with the basic SCR or Triac or the more advanced devices, they all still use a 4-layer pnpn silicon stack comprising three series-connected pn junctions as the basic element that is used to switch large loads.

For safety reasons, we will restrict the investigations in this experiment to the 24V level though the devices used and the circuits discussed would work well at much higher voltage levels.

Part One: Extract Vgt and Igt for the S4010LS2 SCR

Extract the parameters V_{GT} and I_{GT} for the S4010LS2 SCR.

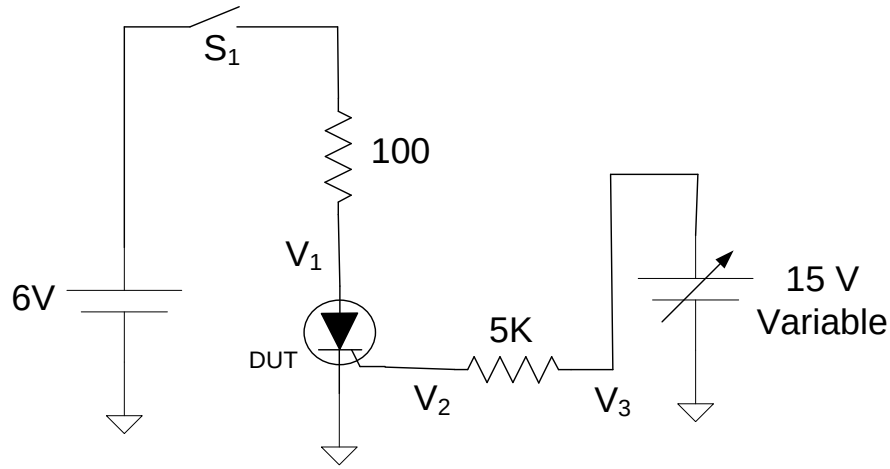

A simple test circuit that can be used for extracting these parameters is shown above. The switch S_1 can be a "wire switch" and servers as a reset for the circuit. It will be normally closed during testing. With V_3 set to 0V, close the switch S_1. The SCR should be in the "OFF" state right after S_1 is closed. Monitor the voltage V_1 on an oscilloscope. The voltage V_1 should be 6V when the SCR is in the "OFF" state. Gradually increase V_3 until the voltage on V_1 drops. The drop in V_1 will occur when the SCR is triggered and the drop in the voltage V_1 should be both abrupt and rapid. When that happens, don't change V_3 anymore. Measure V_2 with a multimeter or oscilloscope. V_2 will equal V_{GT}. Measure V_3 with the same instrument. The trigger current I_{GT} is given by the expression

$$I_{GT} = \frac{V_3 - V_2}{5K}$$

Compare your values with groups around you. What do these values mean? Do they agree with what is given in the datasheet? **Show the results to your TA**

Note: The gate terminal should always be controlled with a gate voltage that varies between 0 and some positive value for the SCR.

Part Two: Light Dimmer

Build a circuit using thyristors that can serve as a light dimmer for lights driven by an AC voltage. Design your circuit so that it can drive a 24V, 0.5mA incandescent lamp.

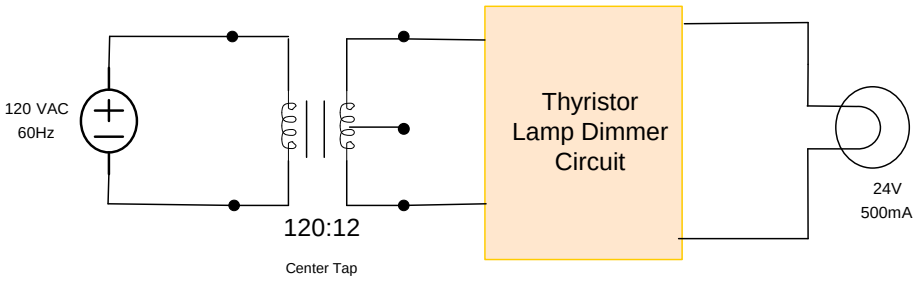

You should be able to continuously adjust the brightness of the bulb from no light output to full intensity. Since you are not controlling a large amount of current, the thyristors that have been specified for this experiment can operate safely without adding a heat sink. But be sure not to touch these devices when operating or immediately after turning off the power as they may be hot.

Comment on the effectiveness of your circuit. Why is a circuit like this used commercially for dimming a lamp instead of using a voltage divider or modulator? How much voltage is lost across your thyristor?

WARNING: When the transformer is plugged in the red and black ports on back are HOT with 120V. DO NOT TOUCH, SHORT, OR HOOK UP TO THESE PLUGS. Use the green and black ports on front.

Hooking up to green-black will give you 6.3V RMS (10Vpeak). To increase the power a bit, hook up green-green, which will give you 12.6V RMS. **Only put this high voltage across the light and thyristor. It will destroy any other devices in your circuit. If you would like to hook it up to anything else you must reduce the voltage.** **Show your functioning circuit to your TA.**

Part Three: Burglar Alarm

Build a light-sensitive burglar alarm. This circuit should trigger an LED (in real life this would trigger a siren, police, etc) that signals the alarm has been tripped. This should require a hard reset (a switch) to turn off. By default the circuit should remain off in the dark and trigger when light is detected. Use a photodiode for this purpose. **Show your functioning circuit to your TA.**

Part Four (Extra Credit) : Light Controlled Light Dimmer

Design, build, and test a circuit where the input to a separate photodetector (such as a photo resistor or photo diode) can be used to modulate the intensity of the incandescent lamp. The intensity of the incandescent lamp should be adjustable from off to full brightness as the light level into the photodetector is varied between the minimum and maximum values.